Shafting

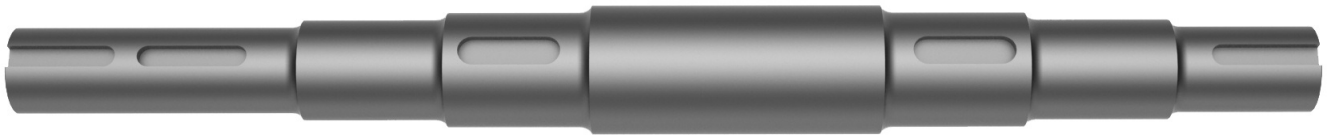

Martin offers a wide variety of solutions for your shafting needs. We offer a number of materials from cold finish ½" diameter to hot roll material in excess of 15" diameter. Stock shafting material is available in several grades including 1144, 1045, 4140 and stainless steel. Our machining capabilities are virtually unlimited featuring CNC lathes, as well as engine lathes, vertical milling machines, horizontal milling machines and more to modify every shaft exactly to your specifications for your unique application.

Diameters shown in table are standard sizes recommended for general use. Standard bushings, bearings, couplings, pulleys, sheaves, clutches, backstops, and other conveyor items are commonly found in these diameters.

Shaft Keyseats
Shaft keyseats are commonly used beneath pulley bushings and with a drive. Pulley keyseats for standard pulleys start 1/2" inside the face and are keyed through the bushing. Location of drive keyseats are standard and the size is determined by the shaft diameter. Additional keyseats or non-standard sizes can be manufactured per request.

Shaft Turn Downs (Stepped Shafts)
For larger shafting it is common to turn the shaft down for a more economical selection of bearings and drives. The turndown is generally less than 25% of the original diameter and the two different diameters should be joined with a generous and smooth fillet to reduce stress concentrations.

Conveyor Shafting should be selected to keep deflection to a minimum and maintain the integrity of the pulley assembly core. Call your Martin representative to properly select the shaft for your pulley and conveying needs.

Standard Shaft Diameters
15/16
1-3/16
1-7/16
1-11/16
1-15/16
2-3/16
2-7/16
2-11/16
2-15/16
3-7/16
3-15/16
4-7/16
4-15/16
5-7/16
6
6-1/2
7
7-1/2

*Tolerances for shafing diameters are as follows:		
	Plus	Minus
Up to 1-1/2"	0.000	0.002
Over 1-1/2" to 2 1/2"	0.000	0.003
Over 2 1/2" to 4"	0.000	0.004
Over 4" to 6"	0.000	0.005
Over 6" to 8"	0.000	0.006
Over 8" to 9"	0.000	0.007
Over 9"	0.000	0.008

* Special tolerances available upon request.

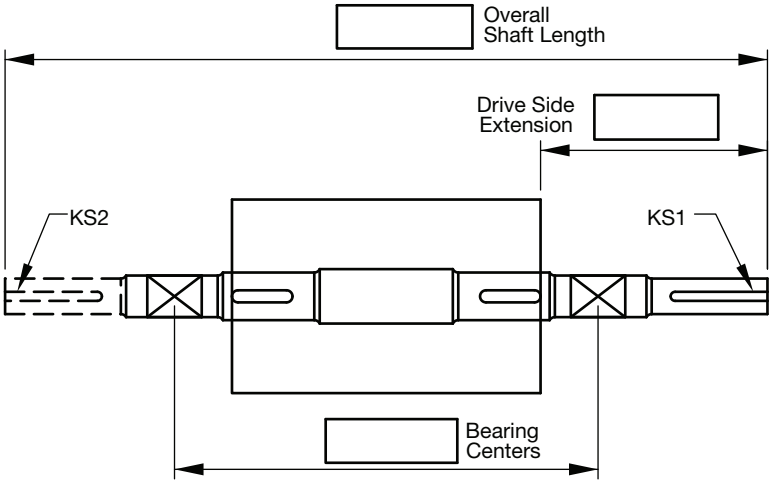

_____ Major Shaft Diameter

_____ Shaft Diameter at Hub

_____ Shaft Diameter at Bearing

_____ Shaft Diameter at KS1

_____ Shaft Diameter at KS2

Keyseat 1 _____ x _____ x _____

Keyseat 2 _____ x _____ x _____

Direction of Rotation From Drive End _____

Lagging

Thickness _____

Type _____